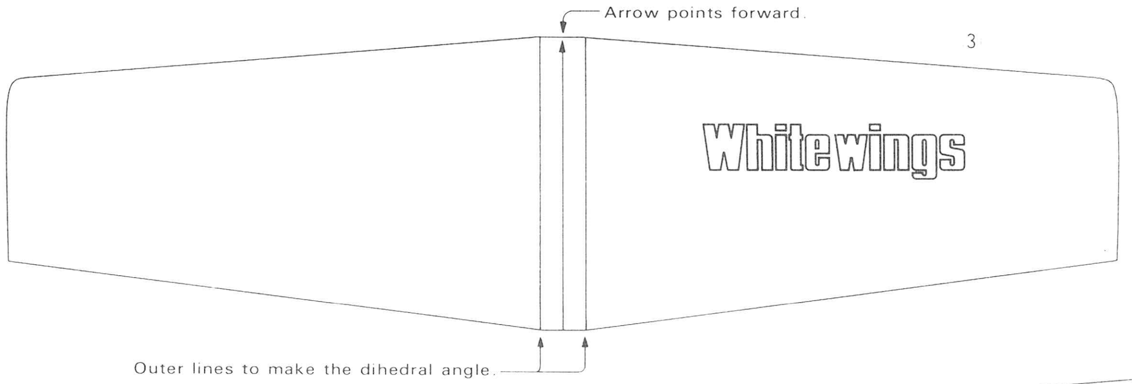

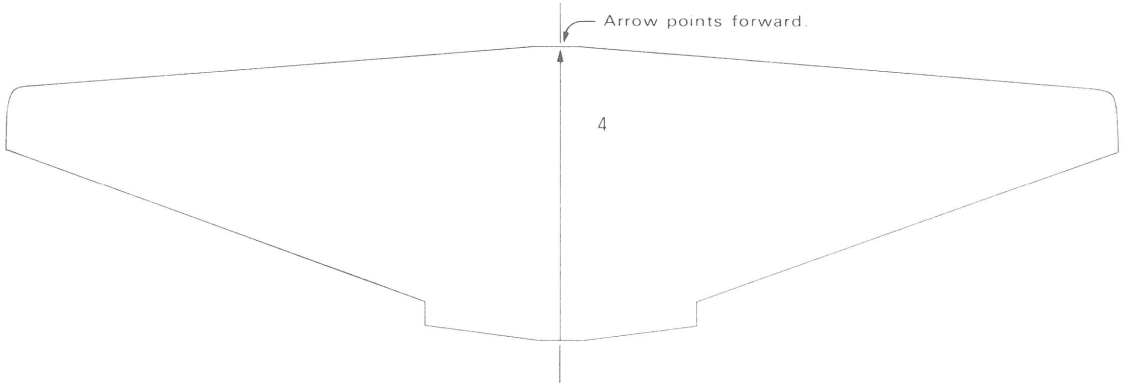

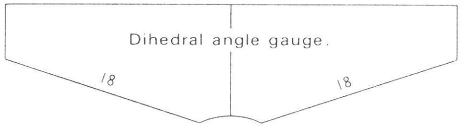

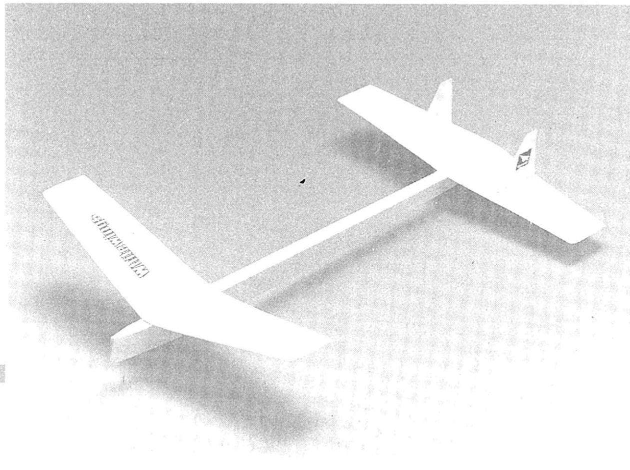

Whitewings®

TANDEM PLANE

- - - - Fold with dashed line inside.

↑ Arrows point forward.

© 1990 Yasuaki Ninomiya (All rights reserved. Reproduction prohibited.)

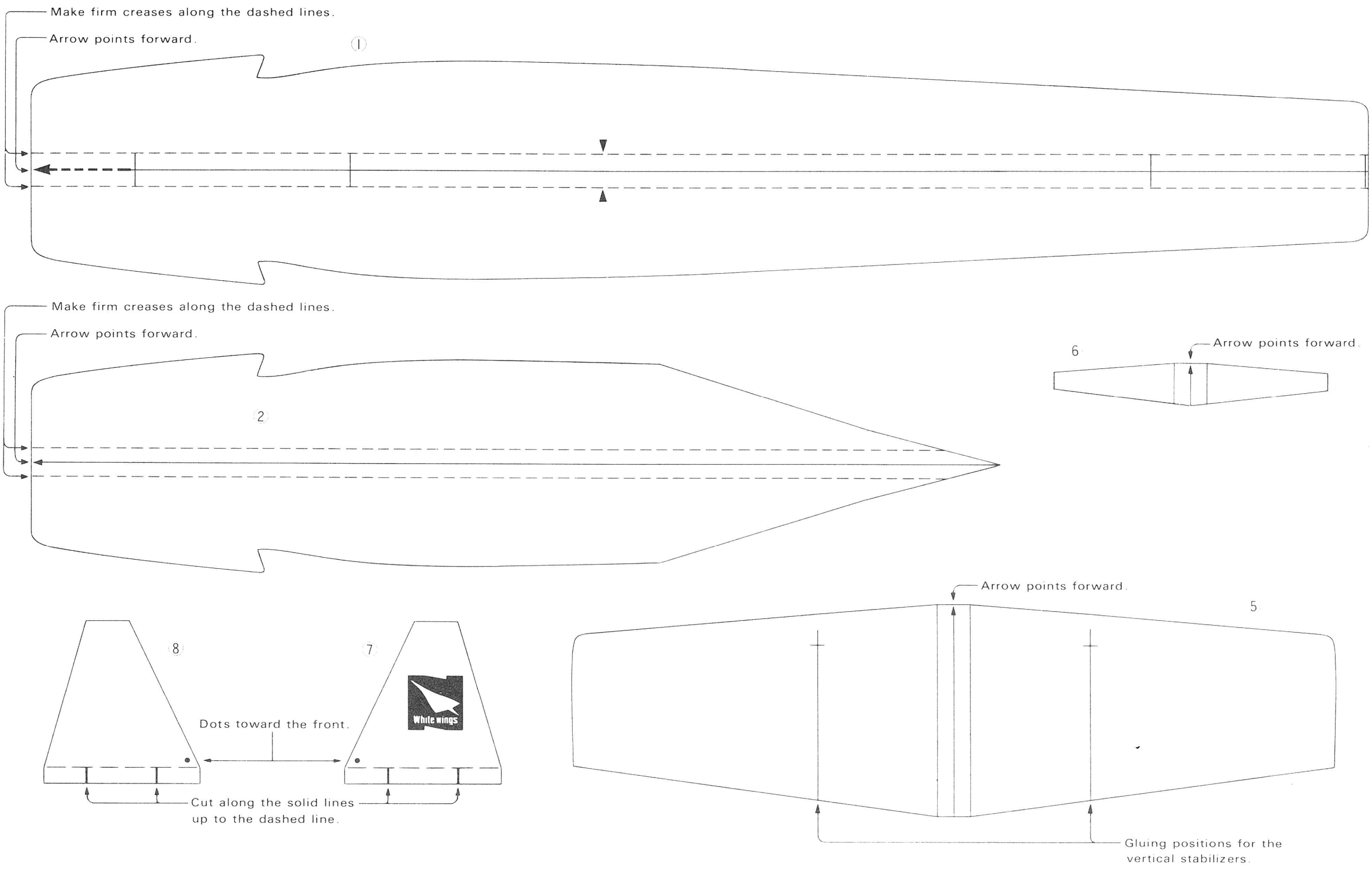
Make firm creases along the dashed lines.
Arrow points forward.
1
Make firm creases along the dashed lines.
Arrow points forward.
2
6
Arrow points forward.
Arrow points forward.
5
8
7
White wings
Dots toward the front.
Cut along the solid lines up to the dashed line.
Gluing positions for the vertical stabilizers.